Workings on the frame DEL6LP300_ and use of the corner connectors DEL6BSFV02.

Overlays

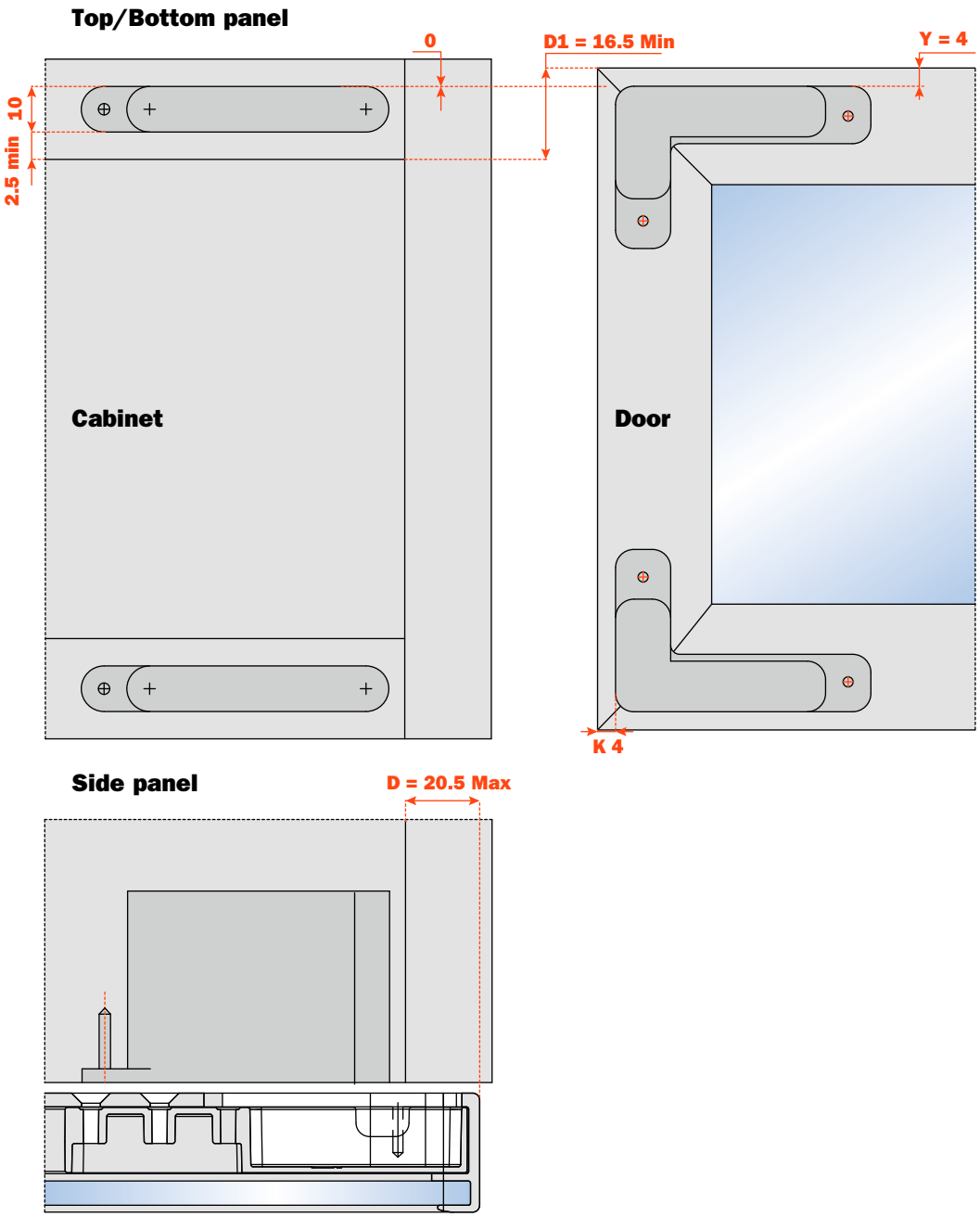

Workings on the top and the bottom panel for the application of the hinge, right side.
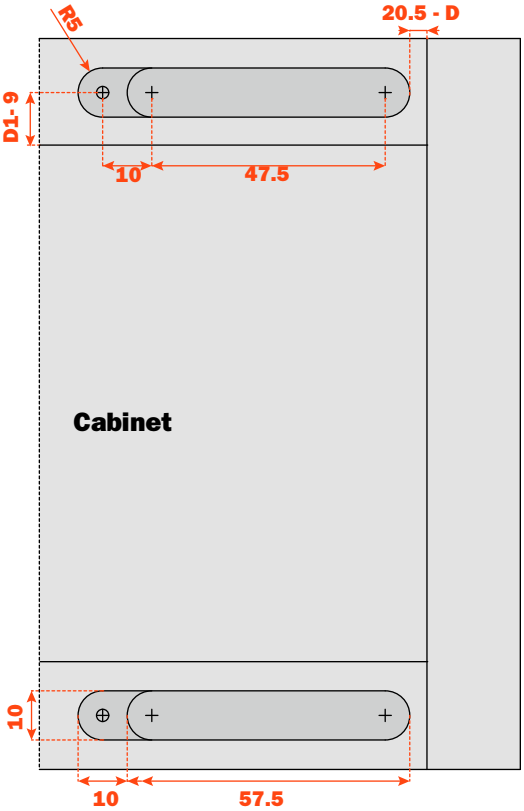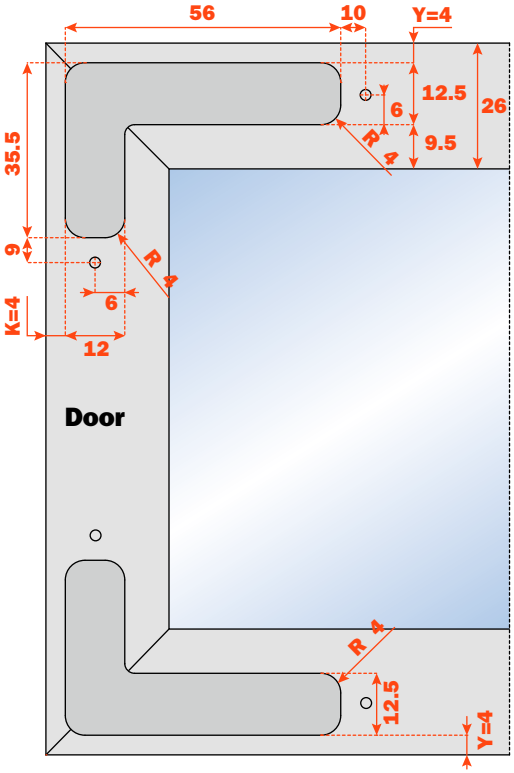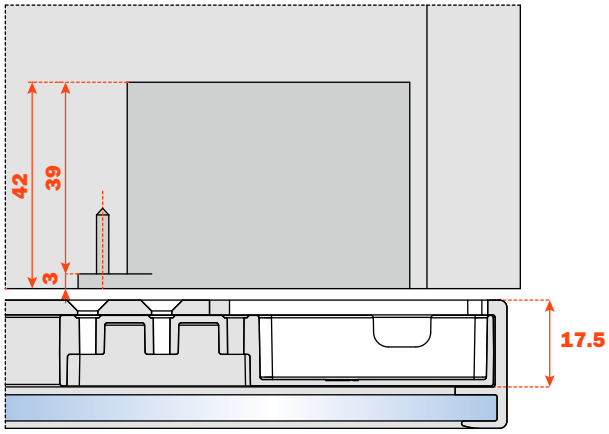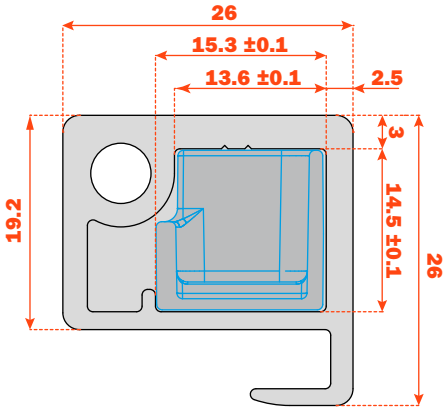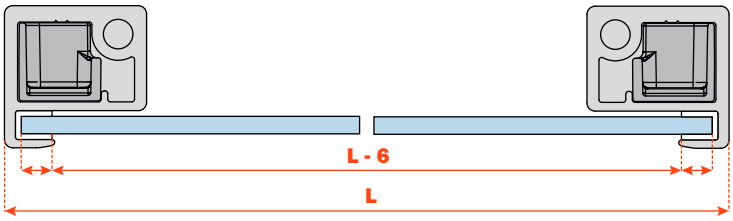
Milling scheme for aluminium-framed doors DEL6LP300_